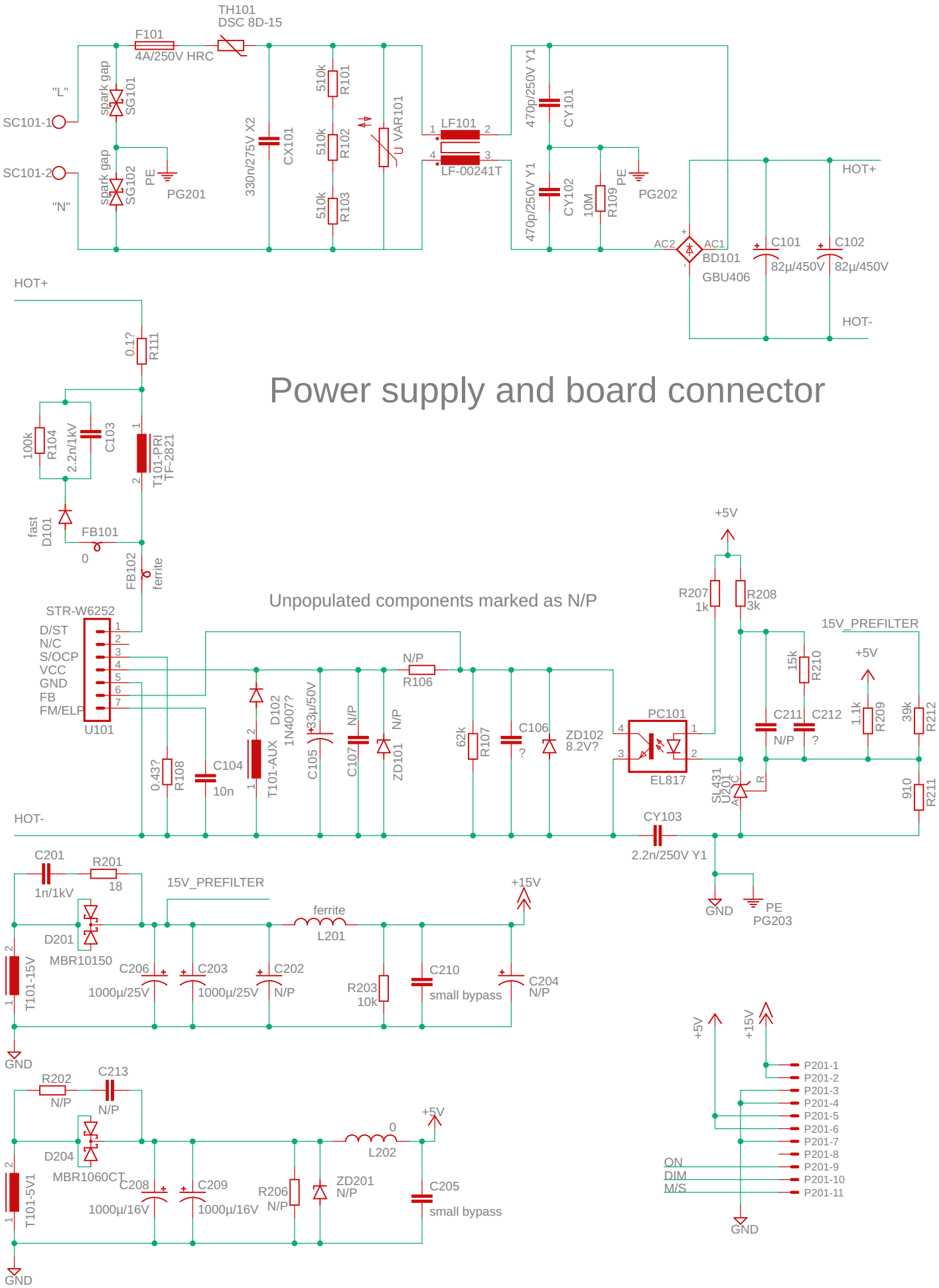
Power supply and board connector
Unpopulated components marked as N/P
TH101
DSC 8D-15
F101
4A/250V HRC
"L"
"N"
SC101-1
SC101-2
spark gap
SG101
SG102
PE
PG201
330n/275V X2
CX101
510k
R101
R102
R103
VAR101
LF101
LF-00241T
470p/250V Y1
CY101
CY102
10M
R109
PG202
HOT+
HOT-
AC1
AC2
BD101
GBU406
C101
C102
82µ/450V
0.1?
R111
100k
R104
2.2n/1kV
C103
T101-PRI
TF-2821
fast
D101
FB101
0
FB102
ferrite
STR-W6252
D/ST
N/C
S/OCP
VCC
GND
FB
FM/ELP
U101
N/P
R106
D102
1N4007?
T101-AUX
+33µ/50V
C105
C107
ZD101
62k
R107
C106
?
ZD102
8.2V?
PC101
EL817
+5V
R207
1k
R208
3k
15V_PREFILTER
15k
R210
C211
C212
1.1k
R209
39k
R212
910
R211
SL431
U201
0.43?
R108
C104
10n
CY103
2.2n/250V Y1
GND
PE
PG203
C201
1n/1kV
R201
18
D201
MBR10150
T101-15V
C206
1000µ/25V
C203
C202
ferrite
L201
+15V
R203
10k
C210
small bypass
C204
R202
C213
D204
MBR1060CT
T101-5V1
C208
1000µ/16V
C209
R206
ZD201
L202
C205
P201-1
P201-2
P201-3
P201-4
P201-5
P201-6
P201-7
P201-8
P201-9
P201-10
P201-11
ON
DIM
M/S

Backlight driver (1/2)

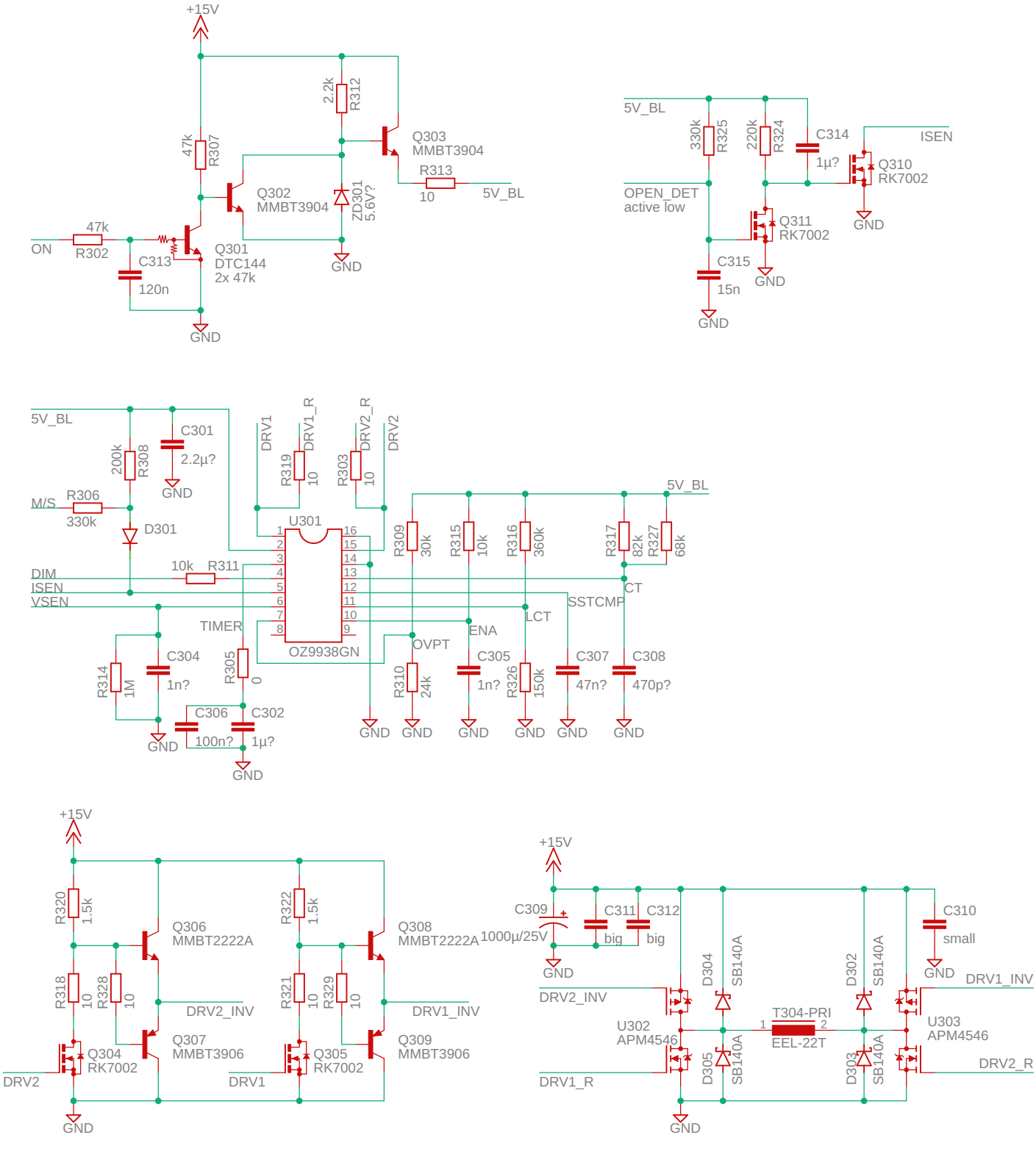
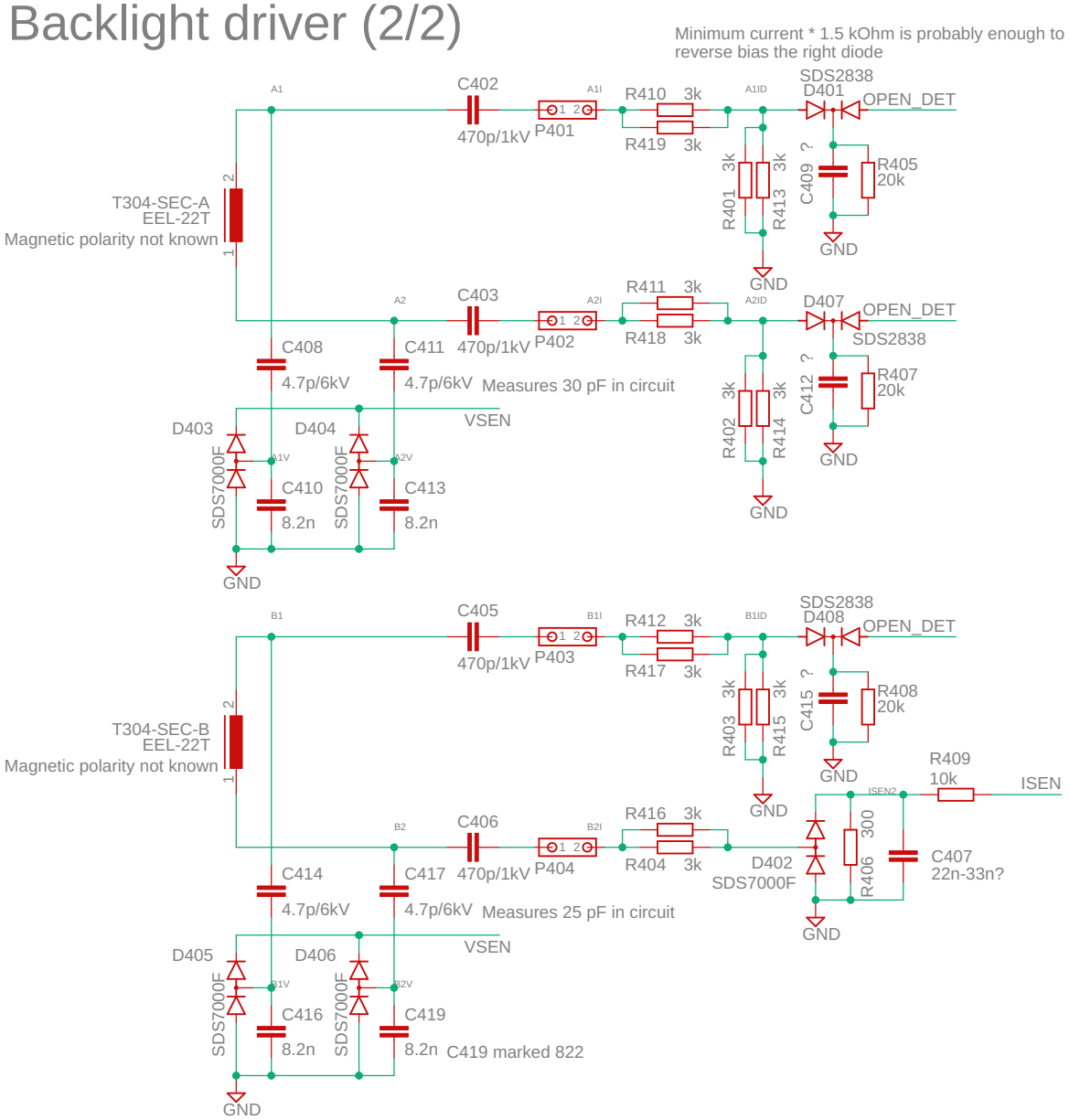
Backlight driver (2/2)